mod. SOGLIA TERMO ULISSE WOOD

Made in Italy

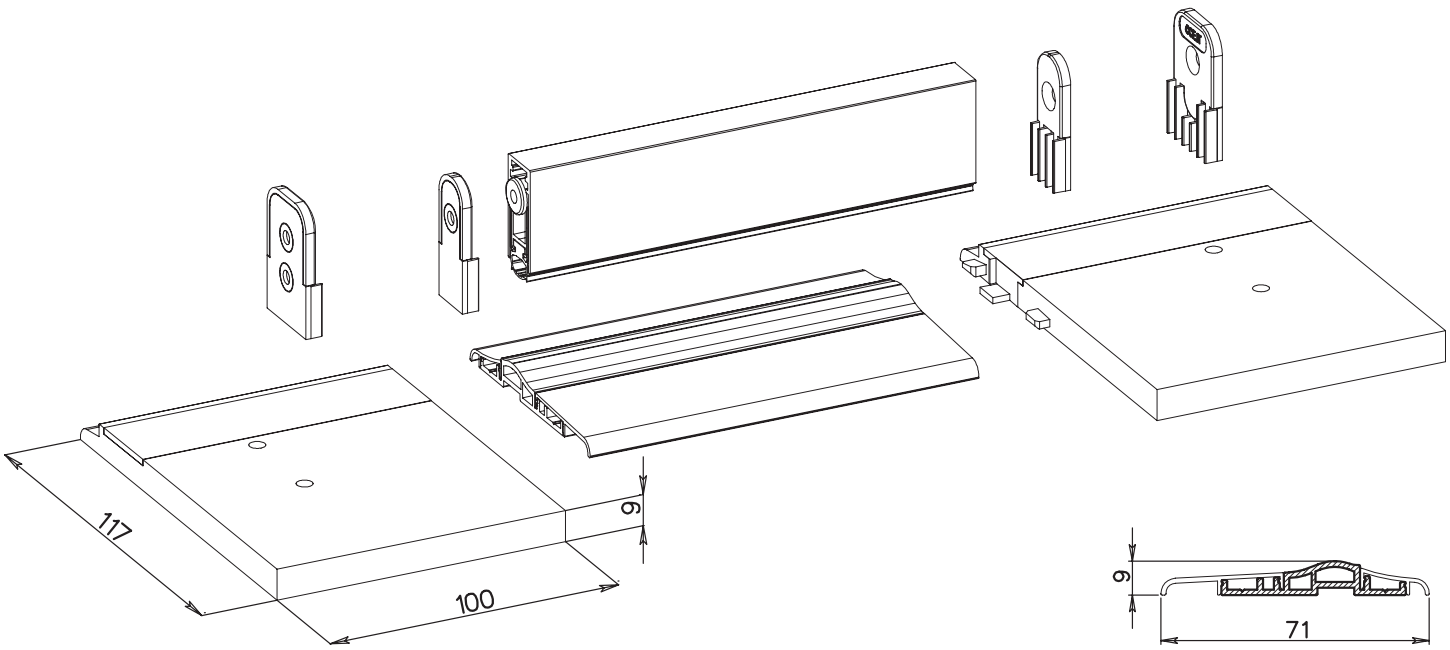

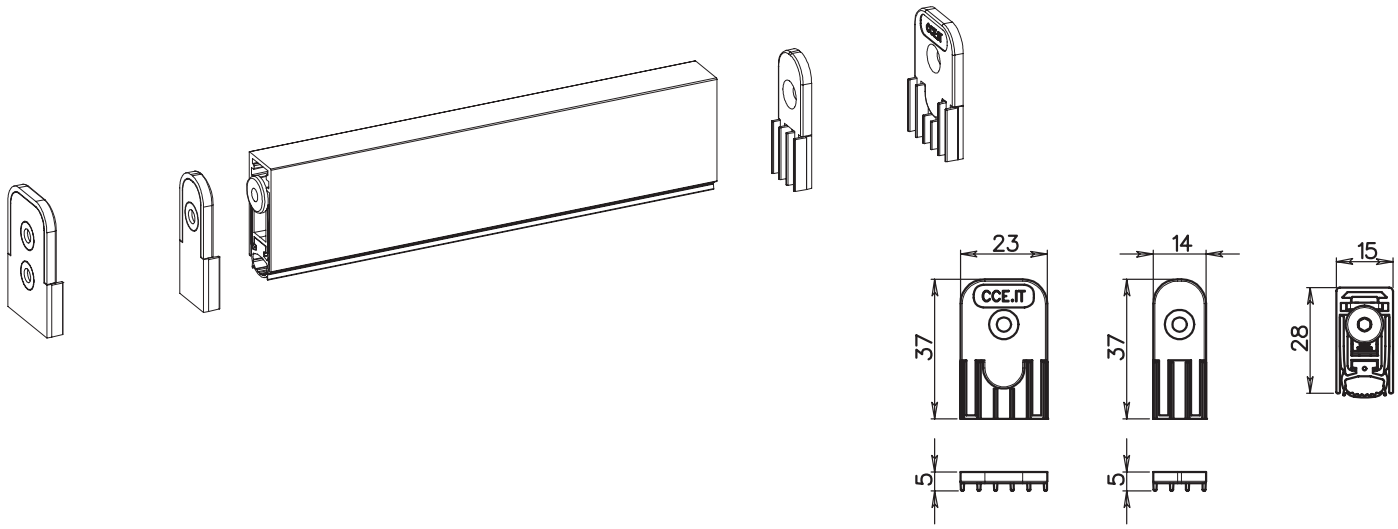

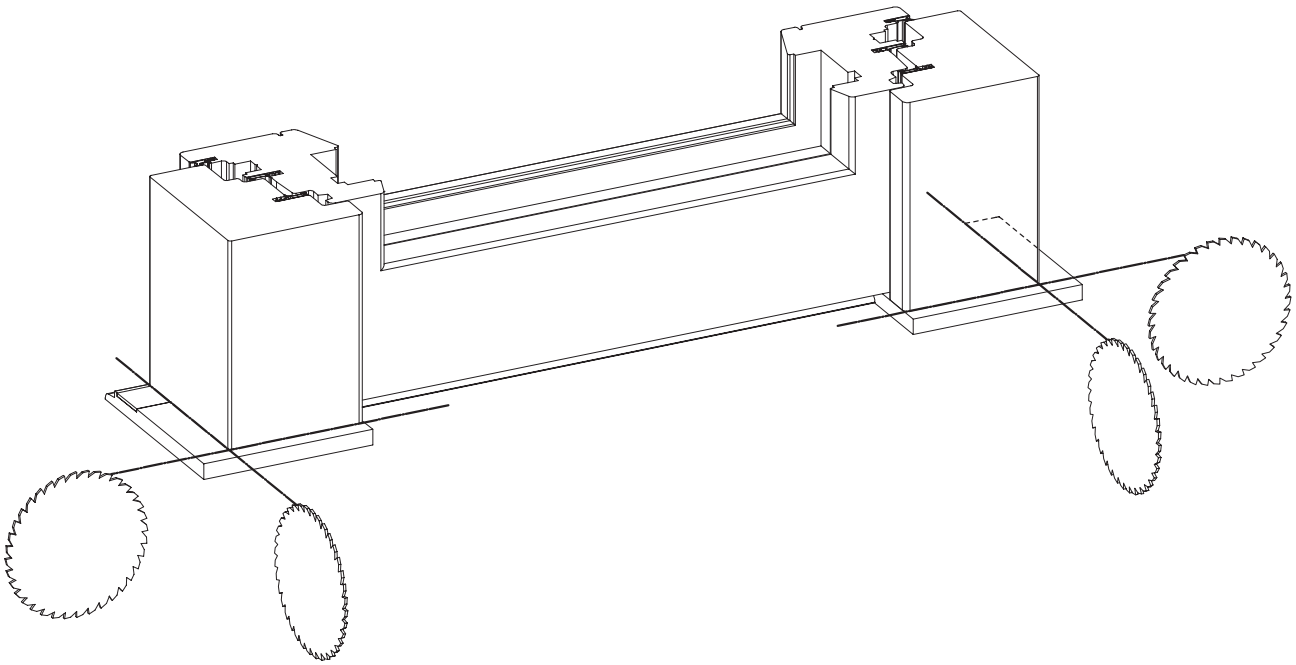

C.C.E. cares about the environment. Our factory uses 100% solar power electricity. This sheet is printed on 100% recyclable paper.

C.C.E. SRL - 35010 VILLA DEL CONTE - VIA DELL'ARTIGIANATO, 16 - PD - ITALY - TEL. +39 049 9325073 - FAX +39 049 9325384 - WWW.CCE.IT - E-MAIL: INFO@CCE.IT